Electrolux PROFESSIONAL

SkyLine ChillS Blast Chiller-Freezer 6GN1/1 30/30 kg for tower installation with IOT Module (R290)

ITEM #

MODEL #

NAME #

SIS #

AIA #

725528 (EBFA61WET)

SkyLine ChillS Blast Chiller Freezer 30/30kg, 6 GN 1/1 or 600x400mm (12 levels pitch 30mm) for Tower execution with touch screen control and IOT module - R290

Short Form Specification

Item No.

Blast chiller freezer with high resolution full touch screen interface, multilanguage
- For 6 GN 1/1 or 600x400 mm trays. Up to 8 ice cream basins (360x250x80h mm)
- Load capacity: chilling 30 kg; freezing 30 kg
- OptiFlow air distribution system to achieve maximum performance with 7 fan speed levels
- Chilling/Freezing modes: Automatic (10 food families with 100+ different pre-installed variants); Programs (a maximum 1000 programs can be stored and organized in 16 different categories); Manual (soft chilling, hard chilling, freezing, holding, turbo cooling and lite hot cycles); Specialistic Cycles (Cruise chilling, proving, retarded proving, fast thawing, Sushi&Sashimi, Sous-Vide chilling, ice-cream, yogurt and chocolate)
- Special functions: MultiTimer chilling/freezing, Make-it-Mine to customize interface, SkyHub to customize homepage, agenda MyPlanner, SkyDuo connection to SkyLine ovens
- Remaining time estimation for probe-driven cycles based on artificial intelligence techniques (ARTE 2.0)
- Automatic and manual defrosting and drying
- USB port to download HACCP data, programs and settings. Connectivity ready
- 3-point multi sensor core temperature probe
- Stainless steel construction throughout
- Internal rounded corners
- Built-in refrigeration unit
- R290 refrigerant gas
- Performance guaranteed at ambient temperatures of +43°C (Climatic class 5)
- Suitable for tower configuration
- Connectivity ready: enables real time to the appliance, possibility to share recipes and monitor information, such as status, statistics, HACCP data and consumptions, and receive service alerts.

APPROVAL:

Main Features

- Blast Chilling cycle: 30 kg from +90°C up to + 3°C.
- Freezing cycle: 30 kg from 90°C up to -41°C.
- X-Freeze cycle: ideal for blast freezing all kinds of food (raw, half or fully cooked).
- Lite-Hot cycle: ideal for soft heating preparations.
- Holding at +3 °C for chilling or -22 °C for freezing, automatically activated at the end of each cycle, to save energy and maintain the target temperature (manual activation is also possible).
- Multi-purpose internal structure suitable for gastronorm, bakery trays or ice-cream basins.
- Turbo cooling: chiller works continuously at the desired temperature; ideal for continuous production.
- Automatic mode including 10 food families (meat, poultry, fish, sauces and soup, vegetables, pasta/ rice, bread, savory and sweet bakery, dessert, beverage fast cooling) with 100+ different pre-installed variants. Through Automatic Sensing Phase the blast chiller optimizes the chilling process according to size, quantity and type of food loaded to achieve the selected result. Real time overview of the chilling parameters. Possibility to personalize and save up to 70 variants per family.
- Cycles+:
  - Cruise Cycle (Patented EP1716769B1 and related family) automatically sets the parameters for the quickest and best chilling (it works with probe)
  - Proving
  - Delayed Proving
  - Fast Thawing
  - Sushi&Sashimi (anisakis-free food)
  - Chill Sous-vide
  - Ice Cream
  - Yogurt
  - Chocolate
- Programs mode: a maximum of 1000 programs can be stored in the blast chiller's memory, to recreate the exact same high standard at any time. The programs can be grouped in 16 different categories to better organize the menu. 16-step chilling programs also available.
- MultiTimer function to manage up to 20 different chilling cycles at the same time, improving flexibility and ensuring excellent results. Can be saved up to 200 MultiTimer programs.
- OptiFlow air distribution system to achieve maximum performance in chilling/heating eveness and temperature control thanks to a special design of the chamber combined with high precision variable speed fan.
- Fan with 7 speed levels. Fan stops in less than 5 seconds when door is opened.
- 3-point multi sensor core temperature probe for high precision and food safety.
- Remaining time estimation for probe-driven cycles based on artificial intelligence techniques (ARTE 2.0 Patented US7971450B2 and related family) for an easier planning of the activities.
- Customizable pre-cooling and pre-heating functions.
- Automatic and manual defrosting and drying.

- Suitable for tower installation including stacking kit.
- Performance guaranteed at ambient temperatures of +43°C (Climatic class 5).

Construction

- Built-in refrigeration unit.
- Solenoid valve to automatically manage the gas pressure in the thermodynamic circuit.
- Main components in 304 AISI stainless steel.
- Evaporator with antirust protection.
- Motors and fan waterproof protected IP54.
- Hygienic internal chamber with all rounded corners for easy cleaning.
- Removable magnetic gasket door with hygienic design.
- Ventilator swinging hinged panel for access to the evaporator for cleaning.
- Door stopper to keep the door open in order to avoid the formation of bad smells (kit available to be mounted on site, depending on preferred door hinge).
- Automatic heated door frame.

User Interface & Data Management

- High resolution full touch screen interface (translated in more than 30 languages) - color-blind friendly panel.
- Pictures upload for full customization of cycles.
- Make-it-mine feature to allow full personalization or locking of the user interface.
- SkyHub lets the user group the favorite functions in the homepage for immediate access.
- MyPlanner works as an agenda where the user can plan the daily work and receive personalized alerts for each task.
- Connectivity ready for real time access to connected appliances from remote and data monitoring (connectivity accessory kit included).
- USB port to download HACCP data, share chilling programs and configurations.
- Trainings and guidances supporting materials easily accessible by scanning QR-Code with any mobile device.
- Automatic consumption visualization at the end of the cycle.
- Connectivity ready for real time access to connected appliances from remote and HACCP monitoring.
- With SkyDuo the Oven and the Blast Chiller are connected to each other and communicate in order to guide the user through the cook&chill process optimizing time and efficiency.

Sustainability

- Human centered design with 4-star certification for ergonomics and usability.

Included Accessories

- 1 of Stacking kit for 6 GN 1/1 oven on 6 GN 1/1 blast chiller freezer - 100mm height — PNC 880565
- 1 of IoT module for OnE Connected (Combi Ovens, Blast chiller/freezers, Rack Type DW) and SkyDuo (one IoT board per appliance - to connect oven to blast chiller for Cook&Chill process). — PNC 922421

Optional Accessories

- Stacking kit for 6 GN 1/1 oven on 6 GN 1/1 blast chiller freezer - 100mm height — PNC 880565 ❑
- Kit of 3 single sensor probes for blast chiller/freezers — PNC 880567 ❑
- Worktop for 6 GN 1/1 right-hinged blast chiller freezer — PNC 880581 ❑
- 5 stainless steel runners for 6 & 10 GN 1/1 blast chiller freezer — PNC 880587 ❑
- Flanged feet for blast chiller freezer — PNC 880589 ❑
- 4 wheels for blast chiller tower execution with oven — PNC 880676 ❑
- 4 wheels for blast chiller freezer — PNC 881284 ❑
- Pair of AISI 304 stainless steel grids, GN 1/1 — PNC 922017 ❑
- AISI 304 stainless steel grid, GN 1/1 — PNC 922062 ❑
- AISI 304 stainless steel bakery/pastry grid 400x600mm — PNC 922264 ❑
- IoT module for OnE Connected (Combi Ovens, Blast chiller/freezers, Rack Type DW) and SkyDuo (one IoT board per appliance - to connect oven to blast chiller for Cook&Chill process). — PNC 922421 ❑
- Connectivity router (WiFi and LAN) — PNC 922435 ❑
- Tray rack with wheels, 6 GN 1/1, 65mm pitch — PNC 922600 ❑
- Tray rack with wheels, 5 GN 1/1, 80mm pitch — PNC 922606 ❑
- Bakery/pastry tray rack with wheels 400x600mm for 6 GN 1/1 oven and blast chiller freezer, 80mm pitch (5 runners) — PNC 922607 ❑
- Trolley for slide-in rack for 6 & 10 GN 1/1 oven and blast chiller freezer — PNC 922626 ❑
- Probe holder for liquids — PNC 922714 ❑

The company reserves the right to make modifications to the products without prior notice. All information correct at time of printing.

SkyLine ChillS
Blast Chiller-Freezer 6GN1/1 30/30 kg for tower installation with IOT Module (R290)

Front

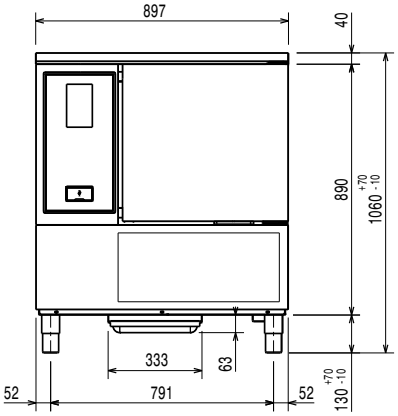

Side

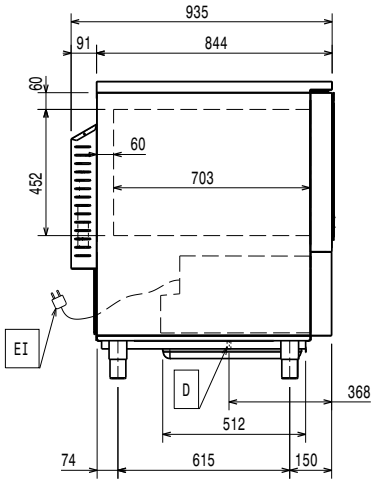

D = Drain
EI = Electrical inlet (power)

Top

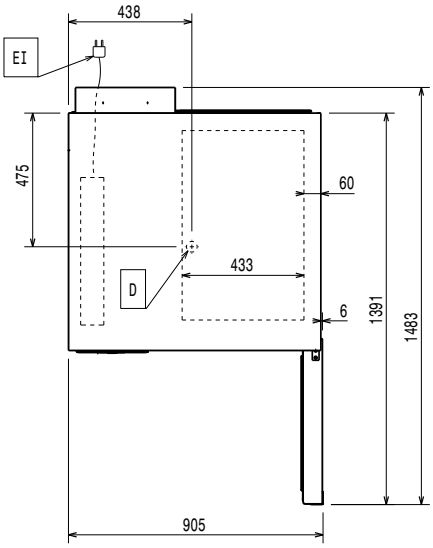

Electric

Circuit breaker required

Supply voltage:	380-415 V/3N ph/50 Hz
Heating power:	0.9 kW

Water:

Drain line size:	1"1/2

Installation:

Clearance:	5 cm on sides and back.

Please see and follow detailed installation instructions provided with the unit

Capacity:

Max load capacity:	30 kg
Number and type of grids:	6 (GN 1/1; 600x400)
Number and type of basins:	8 (360x250x80h)

Key Information:

Door hinges:	Right Side
External dimensions, Width:	897 mm
External dimensions, Depth:	937 mm
External dimensions, Height:	1020 mm
Net weight:	170 kg
Shipping weight:	186 kg
Shipping volume:	1.47 m³

Refrigeration Data

Built-in Compressor and Refrigeration Unit

Refrigeration power at evaporation temperature:	-10 °C
Operating temperature min.:	16 °C
Operating temperature max.:	40 °C
Condenser cooling type:	AIR

Product Information (EN17032 – Commission Regulation EU 2015/1095)

Test performed in a test room at 30°C to chill/ freeze (+10°C/-18° C) a full load of 40mm deep trays filled with mashed potatoes evenly distributed up to a height of 35 mm at starting temperature between 65° and 80°C within 120/270min.

Chilling Cycle Time (+65°C to +10°C):	74 min
Full load capacity (chilling):	30 kg
Freezing Cycle Time (+65°C to -18°C):	252 min
Full load capacity (freezing):	30 kg

Sustainability

Refrigerant type:	R290
GWP Index:	3
Refrigeration power:	4837 W
Refrigerant weight (unit 1, unit 2):	140g; 140g
Energy consumption, cycle (chilling):	0.0957 kWh/kg
Energy consumption, cycle (freezing):	0.2669 kWh/kg

The company reserves the right to make modifications to the products without prior notice. All information correct at time of printing.